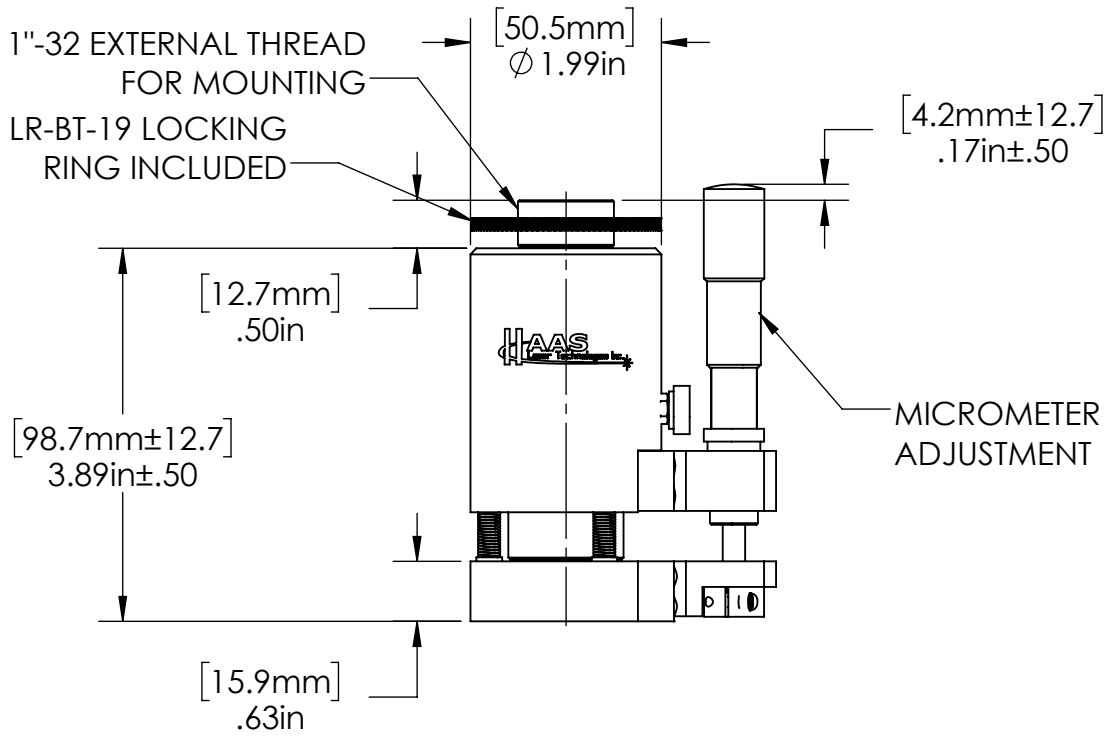

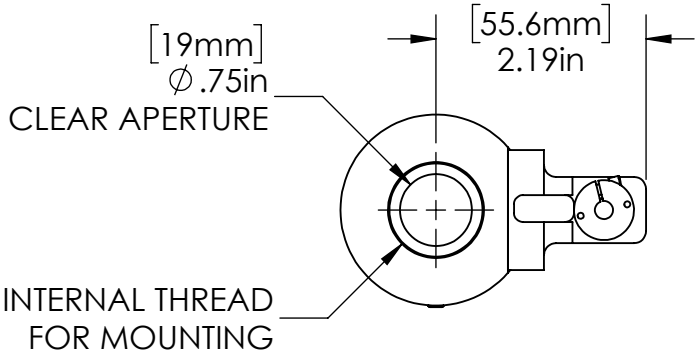

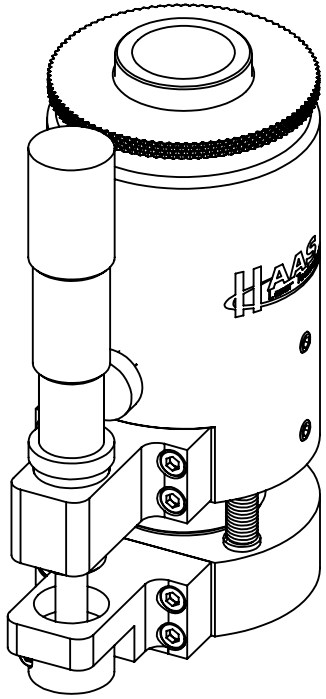

FOR INFORMATION ONLY NOT FOR MANUFACTURING	DATE: 11/28/16	DRAWN BY: TA	CHK'D BY: GJH	*TOLERANCES: (EXCEPT AS NOTED)*	REV.	DESCRIPTION	DATE	APPD	HAAS Laser Technologies Inc.
HAAS DOC.# LAM-19-25-SALES				*X.XXX= ±0.005*					37 IRONIA ROAD FLANDERS NJ 07836 (973) 598-1150 Fax: 598-1151
SPECIFICATIONS SUBJECT TO CHANGE WITHOUT NOTICE CONTACT HAAS LTI FOR MORE INFORMATION				*X.XX= ±0.01*					LAM-19-25 LINEAR ADJUSTABLE MOUNT
				X/X = ± 1/64					BOM#
				ANGULAR: ±0.5°					SCALE: 1:2